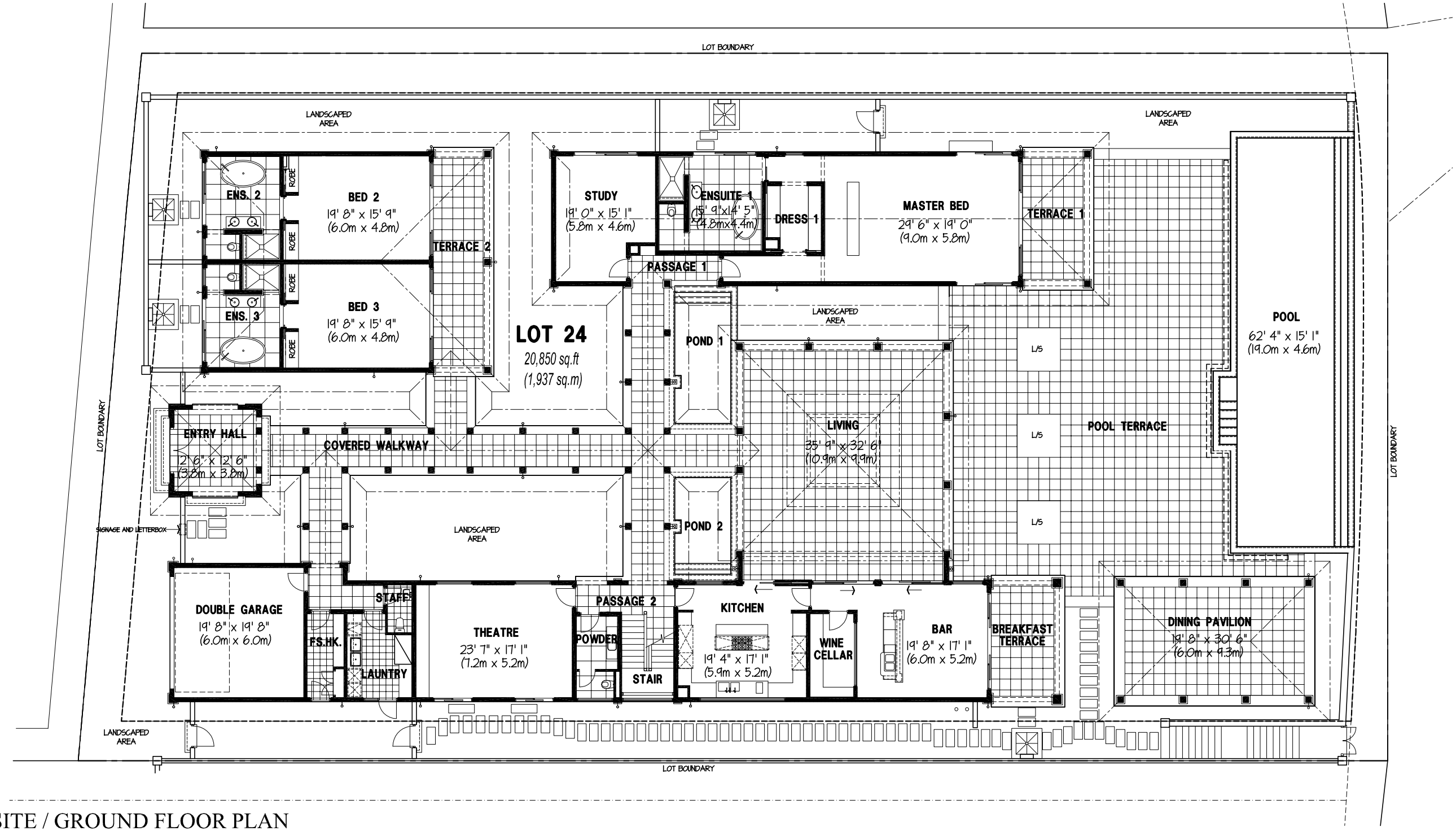

SITE / GROUND FLOOR PLAN

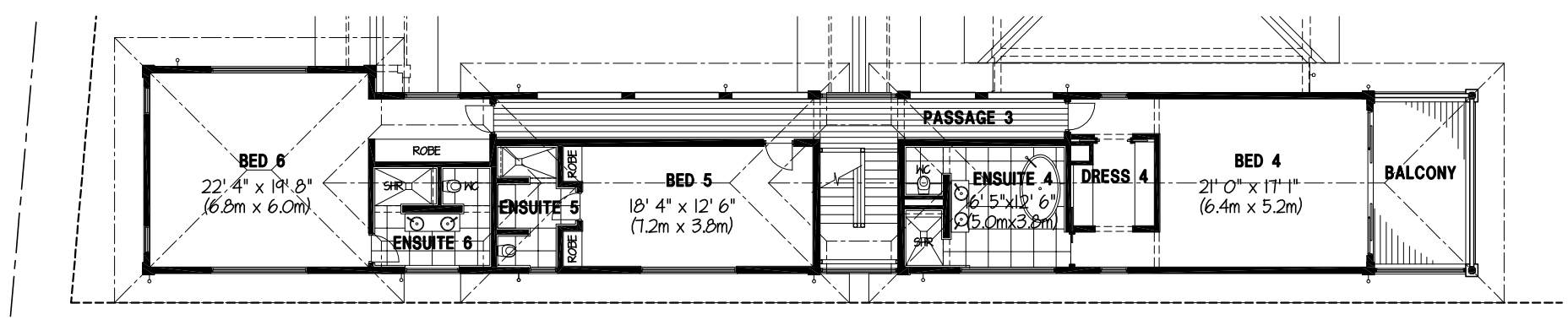

FIRST FLOOR PLAN

CLEARWATER BAY RESORT
BARBADOS

LOT 24 - RESIDENCE - FLOOR PLANS

SCALE 1:200 @ A3

0 2 4 6 8 10m

AREA SCHEDULE (GROUND & FIRST FLOORS):

FULLY ENCLOSED NET AREA: 5,845sq.ft (543 sq.m)
WALKWAY/COVERED NET AREA: 4,230sq.ft (393sq.m)
EXTERNAL NET AREA: 2,497sq.ft (232sq.m)

TOTAL NET AREA: 10,075 sq.ft (936 sq.m)

TOTAL GROSS AREA (Excluding store): 10,796sq.ft (1003sq.m)

GKA
GROUNDS KENT ARCHITECTS

18.09.08 2627 L24-SK810-G